SPC_20

Variant: Production

31st October 2025

R2

Release

Page	Index
1	Front Page
2	Block Diagram
3	Top Page
4	Charger Schematic
5	Controller Schematic
6	LED Display
7	USB Outputs
8	LED Outputs
9	Changes
10	Assembly Notes

Changes
Changes.SchDoc

Assembly Notes
Assembly_Notes.SchDoc

Block Diagram
SPC_20_Block_Diagram.SchDoc

Blocks Smart Solar Charger
SPC_20_TopPage.SchDoc

Title	*SPC_20*		Drawn By: *Kissa Leon Denis*
Size: A3	Name Front Page		Verified By:
Date: 1/30/2026	Time: 10:51:39 PM		Sheet 1 of 10
File: SPC_20_Front.SchDoc			Revision: R2

ANFA ENGINEERING

Cannot open file C:\Users\HP\Downloads\spc20_block_diagram.drawio (1).png. File does not exist.

Title	*SPC_20*	Drawn By:	*Kissa Leon Denis*
Size: A3	Name Block Diagram	Verified By:	
Date: 1/30/2026	Time: 10:51:39 PM	Sheet 2 of 10	
File: SPC_20_Block_Diagram.SchDoc		Revision: R2	

ANFA ENGINEERING

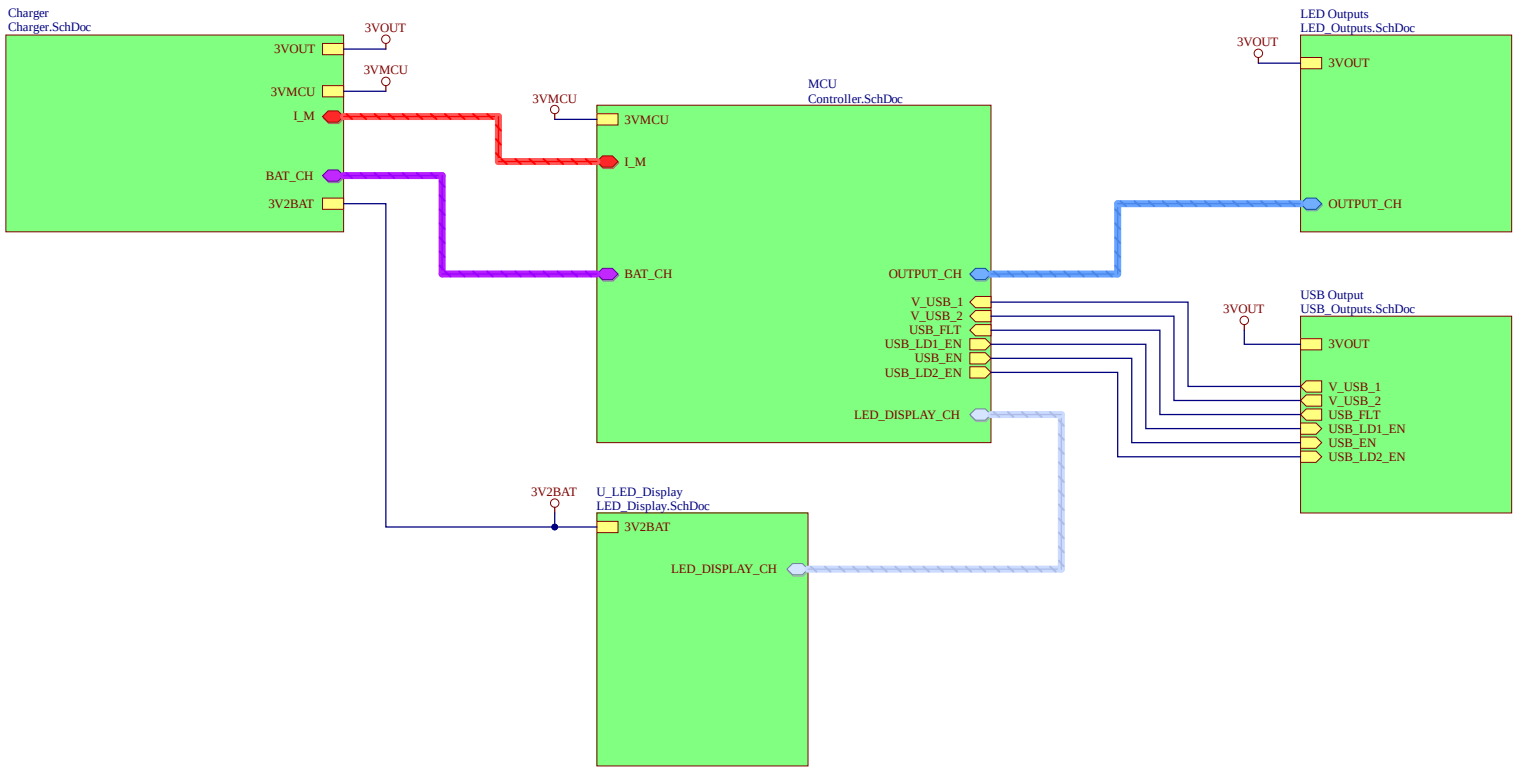

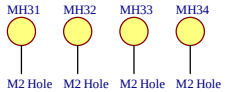

Title	*SPC_20*		Drawn By: *Kissa Leon Denis*
Size: A3	Name Top Page		Verified By:
Date: 1/30/2026	Time: 10:51:39 PM		Sheet 3of 10
File: SPC_20_TopPage.SchDoc			Revision: R2

ANFA ENGINEERING

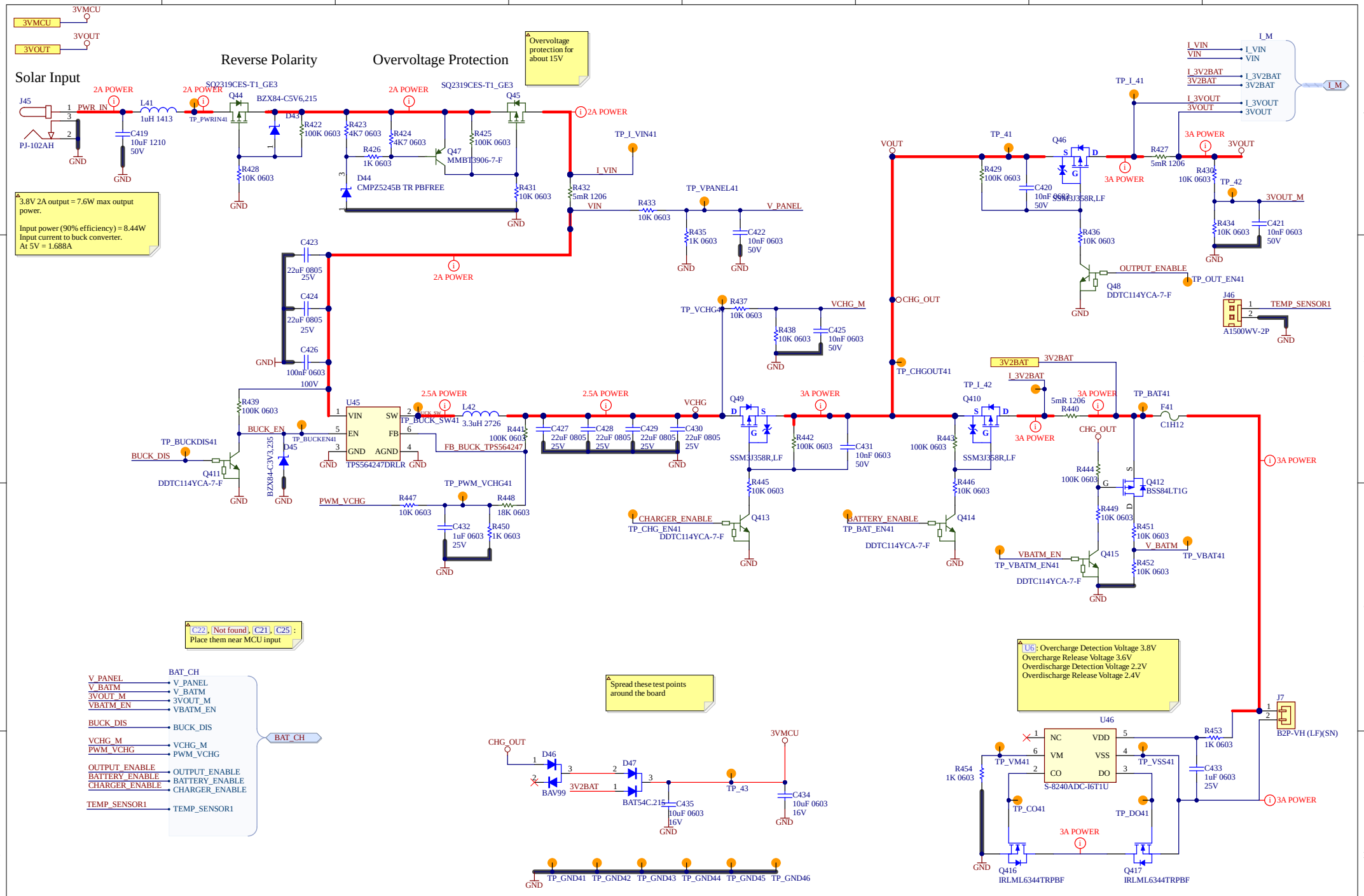

Title	SPC_20		Drawn By: Kissa Leon Denis
Size: A3	Name Charger		Verified By:
Date: 1/30/2026	Time: 10:51:41 PM		Sheet 4 of 10
File: Charger.SchDoc			Revision: R2

ANFA ENGINEERING

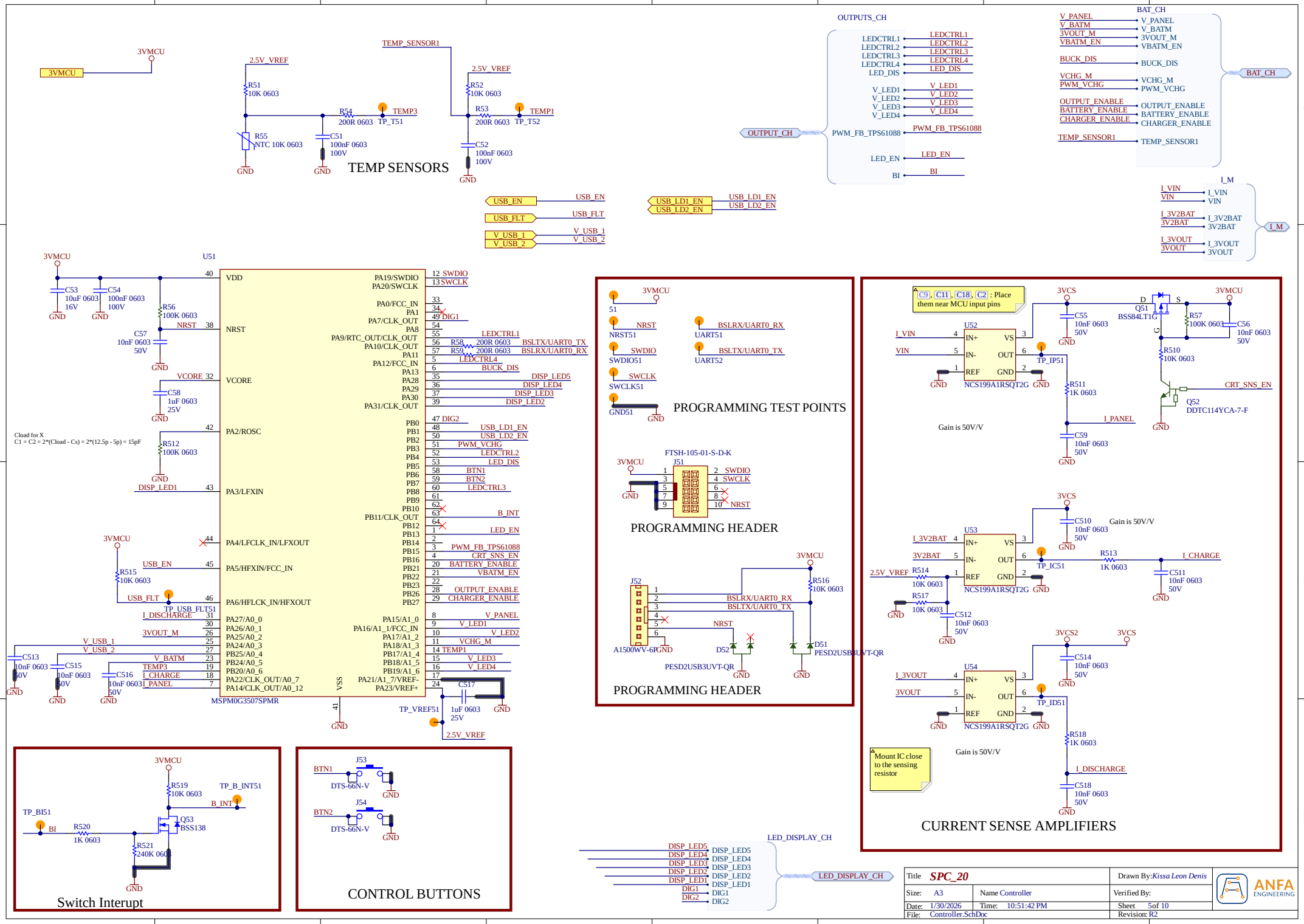
TEMP SENSORS
PROGRAMMING TEST POINTS
PROGRAMMING HEADER
PROGRAMMING HEADER
CURRENT SENSE AMPLIFIERS
Switch Interupt
CONTROL BUTTONS
MSPM0G3507SPMR
U51
OUTPUTS_CH
BAT_CH
I_M
LED_DISPLAY_CH
Title SPC_20
Drawn By: Kissa Leon Denis
Size: A3
Name Controller
Verified By:
Date: 1/30/2026
Time: 10:51:42 PM
Sheet 5 of 10
File: Controller.SchDoc
Revision: R2
ANFA ENGINEERING

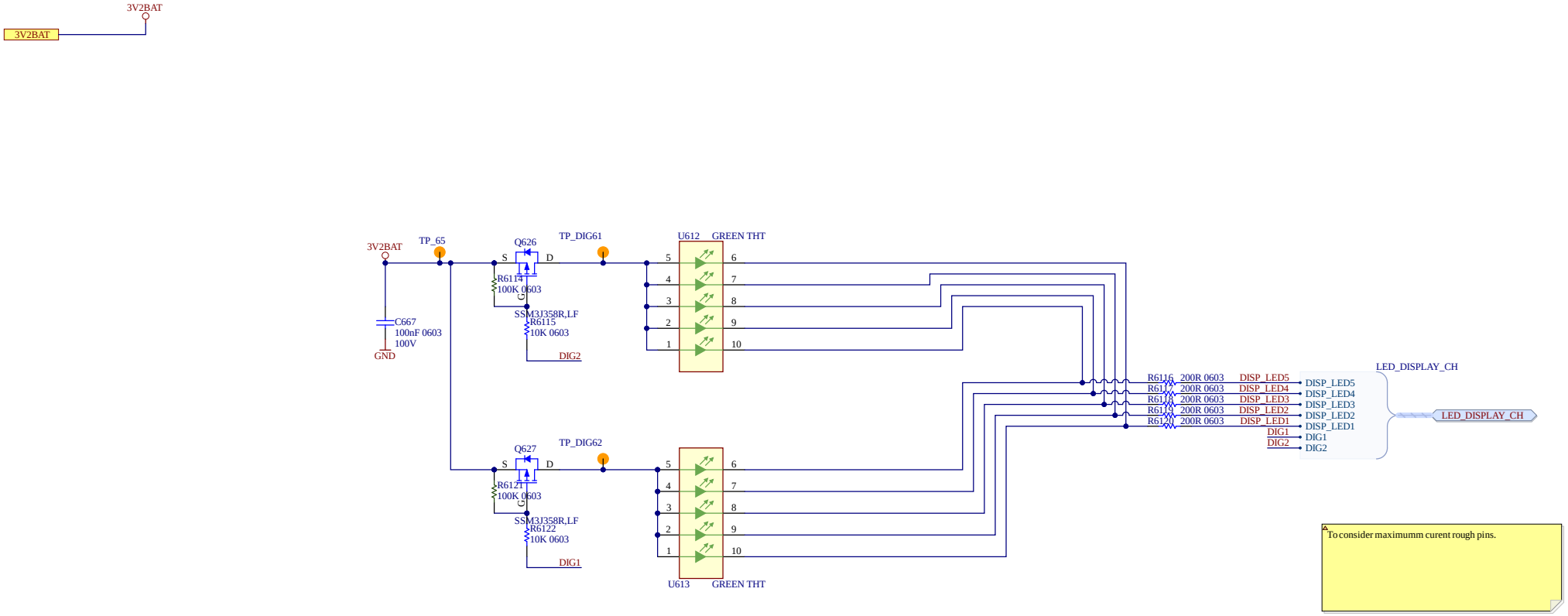

U12 and U13 may be changed to one by a different manufacturer

Title	SPC_20	Drawn By:	Kissa Leon Denis
Size: A3	Name Controller	Verified By:	
Date: 1/30/2026	Time: 10:51:43 PM	Sheet 6 of 10	
File: LED_Display.SchDoc		Revision: R2	

ANFA ENGINEERING

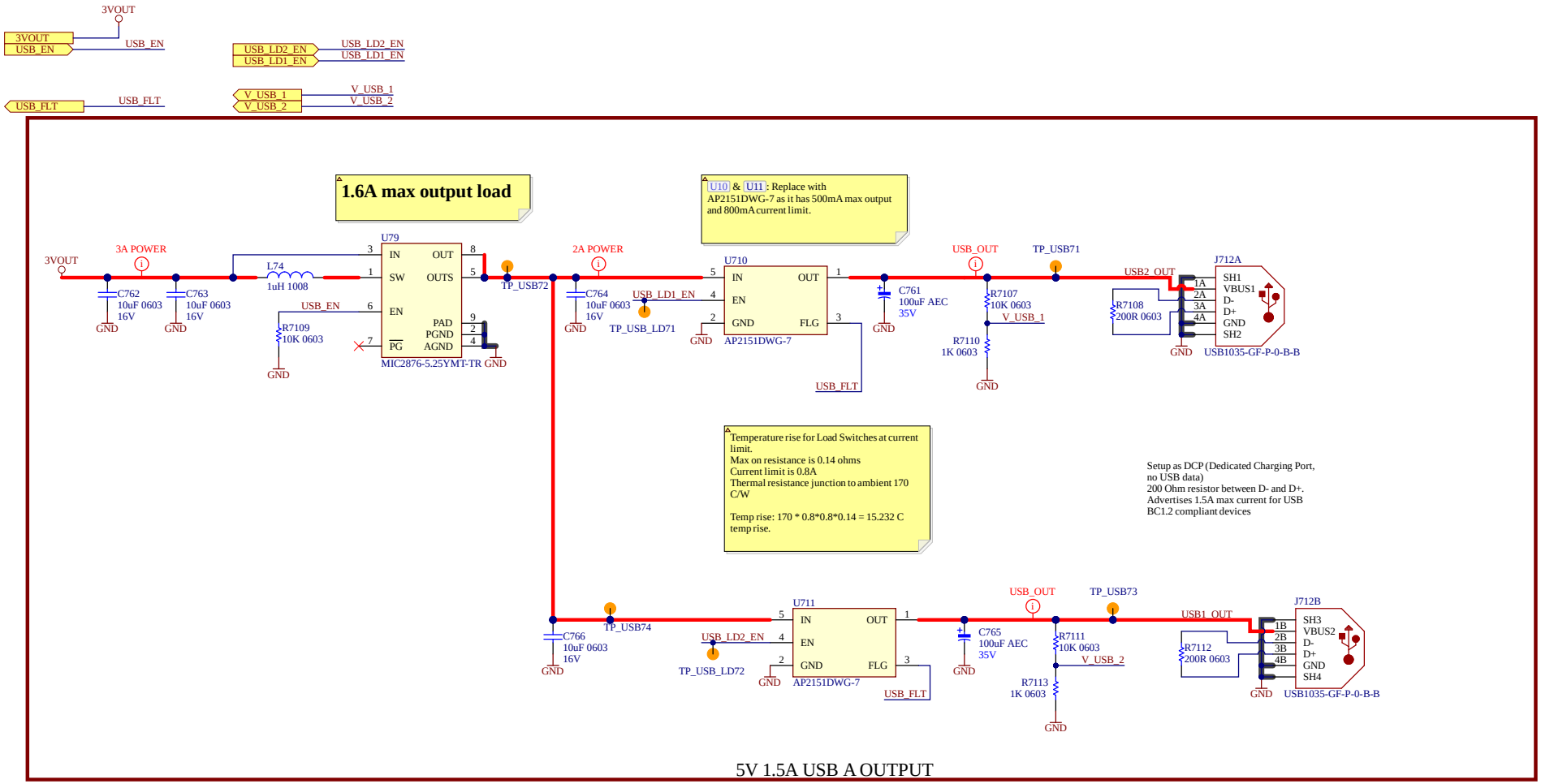

5V 1.5A USB A OUTPUT

Cannot open file C:\Users\HP\Pictures\Screenshots\Screenshot 2025-08-08 161103.png. File does not exist.

Cannot open file C:\Users\HP\Pictures\Screenshots\Screenshot 2025-08-08 161317.png. File does not exist.

Cannot open file C:\Users\HP\Pictures\Screenshots\Screenshot 2025-08-08 161328.png. File does not exist.

Cannot open file C:\Users\HP\Pictures\Screenshots\Screenshot 2025-08-08 161230.png. File does not exist.

Cannot open file C:\Users\HP\Pictures\Screenshots\Screenshot 2025-08-08 161213.png. File does not exist.

Title	SPC_20		Drawn By: Kissa Leon Denis
Size: A3	Name USB Outputs		Verified By:
Date: 1/30/2026	Time: 10:51:43 PM		Sheet 7 of 10
File: USB_Outputs.SchDoc			Revision: R2

ANFA ENGINEERING

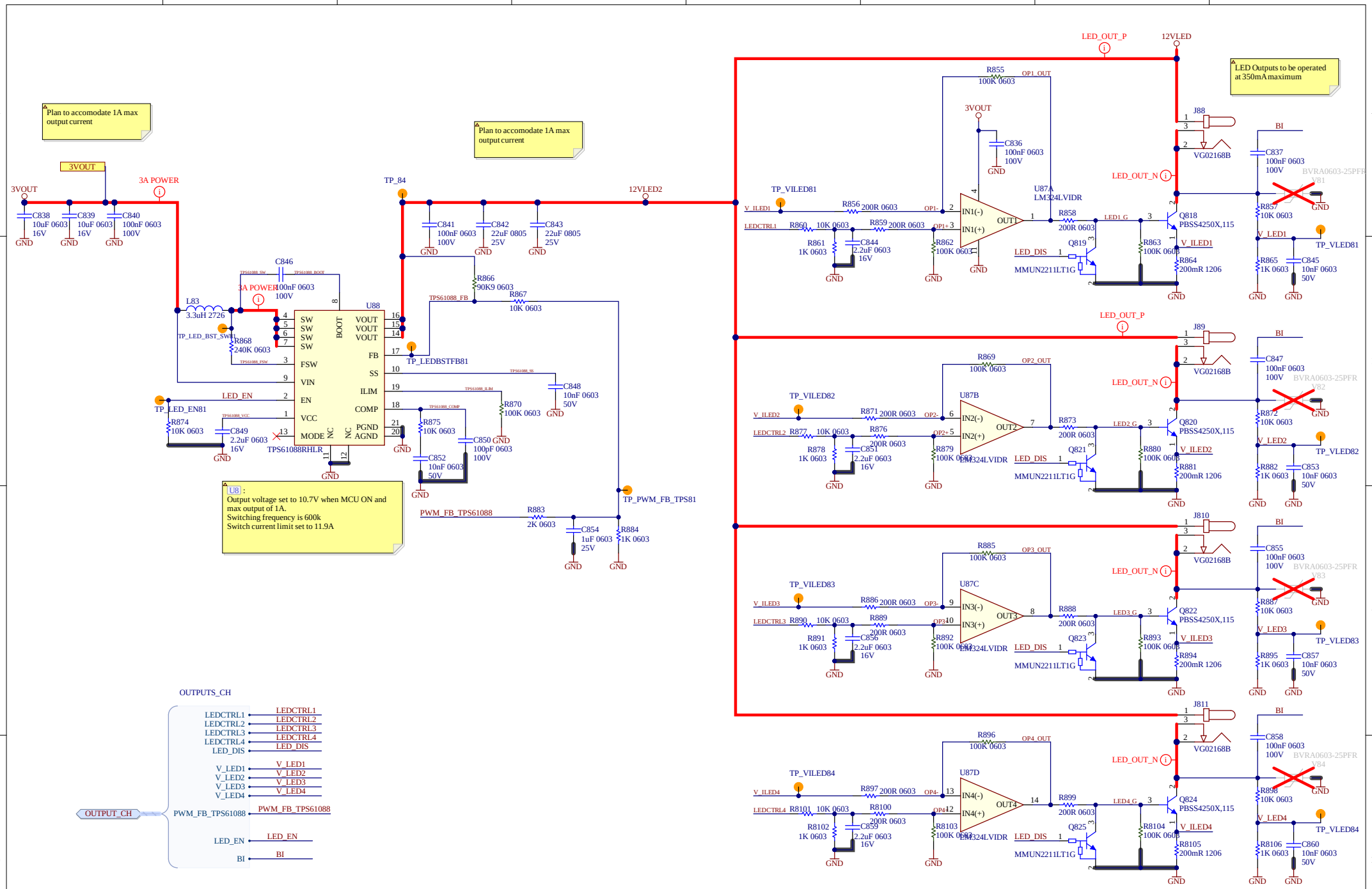
Plan to accomodate 1A max output current
Plan to accomodate 1A max output current
LED Outputs to be operated at 350mA maximum
3VOUT
3A POWER
12VLED2
12VLED
LED_OUT_P
LED_OUT_N
U88
TPS61088RHLR
U8 :
Output voltage set to 10.7V when MCU ON and max output of 1A.
Switching frequency is 600k
Switch current limit set to 11.9A
U87A LM324LVIDR
U87B LM324LVIDR
U87C LM324LVIDR
U87D LM324LVIDR
Q818 PBSS4250X,115
Q820 PBSS4250X,115
Q822 PBSS4250X,115
Q824 PBSS4250X,115
Q819 MMUN2211LT1G
Q821 MMUN2211LT1G
Q823 MMUN2211LT1G
Q825 MMUN2211LT1G
J88 VG02168B
J89 VG02168B
J810 VG02168B
J811 VG02168B
OUTPUTS_CH
OUTPUT_CH
LEDCTRL1
LEDCTRL2
LEDCTRL3
LEDCTRL4
LED_DIS
V_LED1
V_LED2
V_LED3
V_LED4
PWM_FB_TPS61088
LED_EN
BI
Title SPC_20
Drawn By: Kissa Leon Denis
Size: A3
Name Outputs
Verified By:
Date: 1/30/2026
Time: 10:51:45 PM
Sheet 8 of 10
File: LED_Outputs.SchDoc
Revision: R2
ANFA ENGINEERING

Date	Change
31.10.2025	1. Changed component designators to match ComponentDesignator_SheetNumber_ComponentIndex for easier location of which sheet components are on 2. Added two more LED outputs and changed OPAMP from LM358 to LM324 3. Updated MCU to LED Outputs Harness to reflect additions to LED Outputs

Title	SPC_20	Drawn By:	Kissa Leon Denis
Size: A3	Name Changes	Verified By:	
Date: 1/30/2026	Time: 10:51:46 PM	Sheet 9 of 10	
File: Changes.SchDoc		Revision: R2	

ANFA ENGINEERING

Title	***SPC_20***		Drawn By: *Kissa Leon Denis*
Size: A3	Name Assembly notes		Verified By:
Date: 1/30/2026	Time: 10:51:46 PM		Sheet 10 of 10
File: Assembly_Notes.SchDoc			Revision: R2

ANFA ENGINEERING